Smart choice for power

xantrex

Affordable Solar Note: Xantrex says, "[This] AC Coupling Application Note ...was specifically written for XW4024s and XW4548s before firmware revision 1.04 and XW6048s with firmware revision before 1.05. It describes how to connect the external shutdown lines. Frequency Variation Pattern describes how the newer firmware acts in order to disconnect the grid tie inverters through the use of frequency shift. Use of an external shutdown line is not required if you have the newer firmware."

APPLICATION NOTE

AC Coupling of Xantrex Inverters:

Forming mini-grids with XW and GT products

Prepared by: Andrew Swingler / Jeff Everett

Date of Report: March 16, 2007

Xantrex Technology Inc. is a world leader in advanced power electronics. We make a positive difference in the lives of people around the world by combining proven technology with unparalleled market understanding to bring our customers solutions that enable the delivery of electricity anytime, anywhere.

www.xantrex.com

1 Introduction

The philosophy of the residential/light industrial AC centric system is one where all the energy sources and loads are connected directly to the AC bus.

The benefits of an AC centric system over a DC centric system are as follows:

- DC infrastructure is kept to a minimum by utilizing small gauge wire for high-voltage (<600V) string PV arrays and reducing heavy gauge battery interconnects. This means installation is easier and less expensive since wire sizes and conduits can be smaller.
- Improved array-to-grid efficiency by removing a conversion step. In an AC centric system, the array is connected directly to the grid through a grid-tie inverter, i.e. DC (array) → AC (grid). In a DC centric system, the array is connected to the battery bank through a charge controller, which is then connected to the grid through an inverter/charger, i.e. DC (array) → DC (battery) → AC (grid).
- Improved array-to-load efficiency if demand occurs at the same time as solar production.

The weaknesses of an AC centric system

- Lower array-to-load efficiency if demand does not occur at the same time as solar production since energy needs to be stored in the battery for later use, i.e. DC (array) → AC(bus) → DC(battery) → AC(load).
- Grid-tie inverters are more expensive than Solar charge controllers.

This application note outlines how Xantrex GT Series and XW Series inverters can be interconnected to form an AC Mini-Grid.

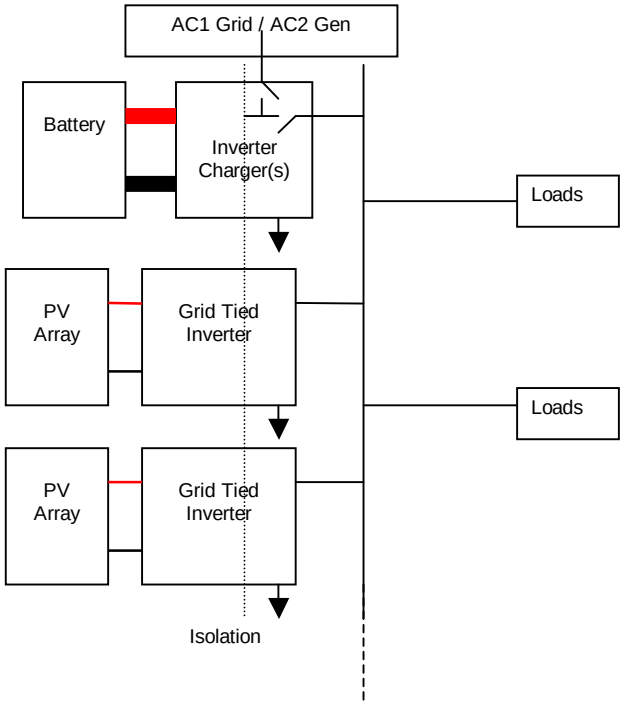

Figure 1: Flexible AC centric architecture

2 Overview

Figure 2 shows how XW Inverter/Chargers can be configured with GT Inverters to function as an AC centric system.

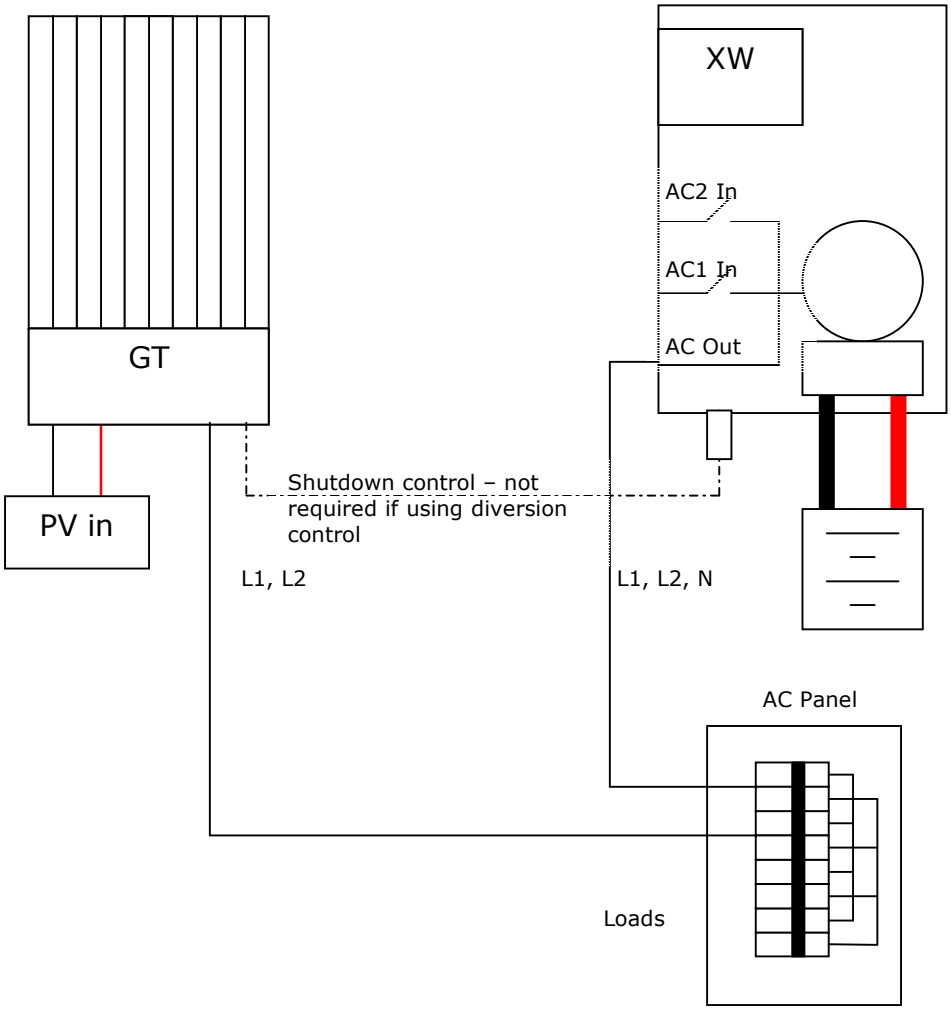

Figure 2: AC coupled system with simple communication

The GT Inverter(s) each has its own AC breaker and is paralleled with the XW Inverter's AC Out. While there is room to add breakers for the GT's right into the XW-Power Distribution Panel it is easiest to run wires from the Inv1 Out/Bypass bus bars in the XW-PDP to a standard AC sub panel which contains the GT breakers and whatever load breakers there are.

3 Operation

3.1 While Grid Connected…

On each of its two AC inputs, the XW is equipped with an input relay that closes only when the AC source is qualified (i.e. within the user-adjustable range). Closing the input relay connects the AC source directly to the XW's AC output. In this pass-through mode, the XW essentially behaves like any other load as it charges the battery bank. If the AC voltage and frequency are within limits per UL1741, the GT Inverter(s) after a five minute delay will harvest the solar energy from the array. This energy will be consumed locally by the local loads (including what's needed to recharge the battery bank) and any excess will be exported back to the grid.

Like the GT Series Inverters, the XW Series Inverter/Chargers use a proprietary positive feedback controller that is guaranteed to detect islanding conditions for all power levels, as governed by IEEE and UL standards. Anti-Islanding protection is an essential safety feature that ensures no person working on the utility grid is harmed by a distributed energy source.

The XW continuously monitors the input voltage and frequency. If the voltage and/or frequency move beyond the acceptable ranges—during a power surge or outage, for example — the XW opens its input relay, disconnecting the system from the AC source forcing the system to stop selling power to the utility grid. As soon as the relay opens, the XW transfers from charge mode to invert mode to provide power to the connected loads. The GT inverters may detect the temporary loss of AC during this transfer and stop harvesting until they detect a stable AC output for a minimum of five minutes.

During utility outages, the system becomes an Off-grid system.

3.2 Stand-alone (Off-grid) Systems

When the grid is not present and it is inverting, the XW Inverter/Charger acts as a voltage source, defining the AC bus by tightly controlling voltage and frequency on its AC output. The GT Inverter(s) and AC loads are all wired to this AC bus. The GT Inverters will qualify and connect to this AC bus just like they would to the utility grid.

When it's in invert mode, electrical current is free to flow in either direction through the XW Inverter/Charger. This means if the GT inverter(s) is providing more power on the AC bus than the loads can consume, current will flow back through the XW to recharge the battery.

Unlike its behavior when in charge mode, the XW does not regulate charging when power is flowing from its AC output to the battery. This will not pose a problem if the battery is sufficiently discharged. However, if the battery is already full and there are not enough loads on the system, there is potential that if the GT Inverter(s) continue selling power to the AC bus, the battery voltage will rise until an over voltage fault condition ("High Batt Cut Out" setting) is reached. This will cause the XW to shut down and will cause the

entire system to shut down, including your AC loads. This may also damage the battery if the "High Batt Cut Out" is set too high for the battery. To prevent this from happening, there must be a method of preventing overcharge.

4 Overcharge Prevention Options

There are three options to prevent overcharge. Two of these methods use the XW Auxiliary Output to directly command the GT inverter(s) to stop producing power. The third uses one or more C-Series controllers configured in Diversion Control Mode.

4.1 Optically Isolated Shutdown Line

Though this is the most robust and efficient solution, the Optically Isolated Shutdown Line is not supplied by Xantrex and must be built using standard, off the shelf electronic components.

The XW aux output activates an optocoupler that in turn shorts pins 1and 4 on the GT's 3Phase port. Please note that polarity from the output of the optocoupler to the pins on the GT's port must be observed. The port on the GT is RJ11-4pin, often referred to as RJ9 which is what is used in telephone handsets. A standard handset cord is a crossover type, so it will generally be required to build your own cord as pin 1 and 4 will be reversed. When these pins are shorted the GT(s) immediately shuts down. Once the pins are un-shorted the GT waits the prescribed 5 minute delay time to reconnect. In this way the XW can signal the GT to shut down without interrupting the power flow to the loads on the output of the inverter.

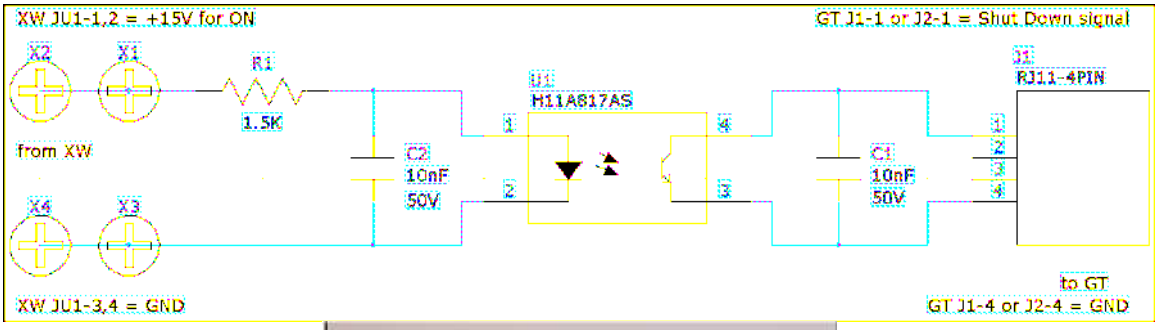

This simple communication interface enables the XW inverter to signal the GT to shutdown before the XW shuts down on "High Batt Cut Out". The AC loads will continue to operate from power produced by the XW inverter and once the battery voltage has dropped to a safe level, the XW will clear the Aux Output line which will turn the GT back on.

4.2 Electromechanical Relay Shutdown Line

The Electromechanical Relay Shutdown Line is not supplied by Xantrex and must be built using standard, off the shelf electronic components. It provides a good level of service life, limited only to the life of the relay. It also provides excellent efficiency to the system.

The XW aux output activates a relay that in turn shorts pins 1and 4 on the GT's 3Phase port. The relay must have a 12V coil and must not draw more than 0.25A. The contacts experience negligible current flow so the relay can be very small. When these pins are shorted the GT(s) immediately shuts down. Once the pins are un-shorted the GT waits the prescribed 5 minute delay time to reconnect. In this way the XW can signal the GT to shut down without interrupting the power flow to the loads on the output of the inverter.

This simple communication interface enables the XW inverter to signal the GT to shut down before the XW shuts down on "High Batt Cut Out".

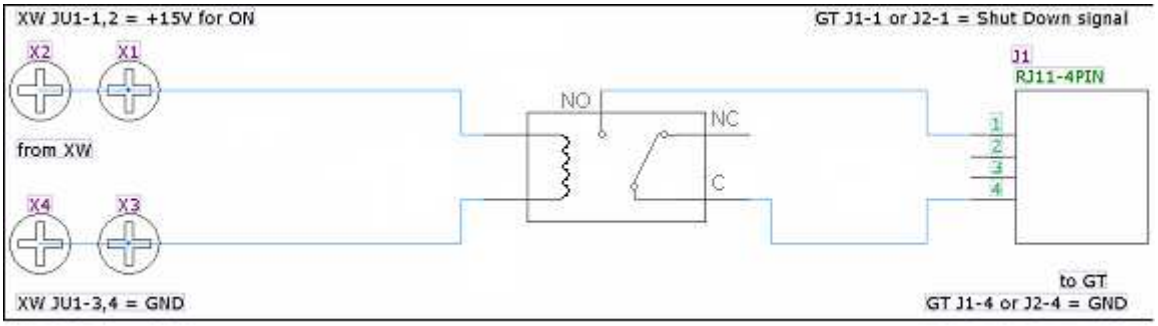

4.3 Using C-Series Controller as Diversion Control

This option uses standard Xantrex parts and does not require anything to be built. It does require one or more Controllers as well as one or more diversion loads. The combination of the diversion loads must be equal or greater than the power produced by the solar array. Each diversion load cannot be greater than the capacity of the controller that it is connected to. Be sure to read the user guide for the C-Series which is available from our website at http://www.xantrex.com/web/id/63/docserve.aspx.

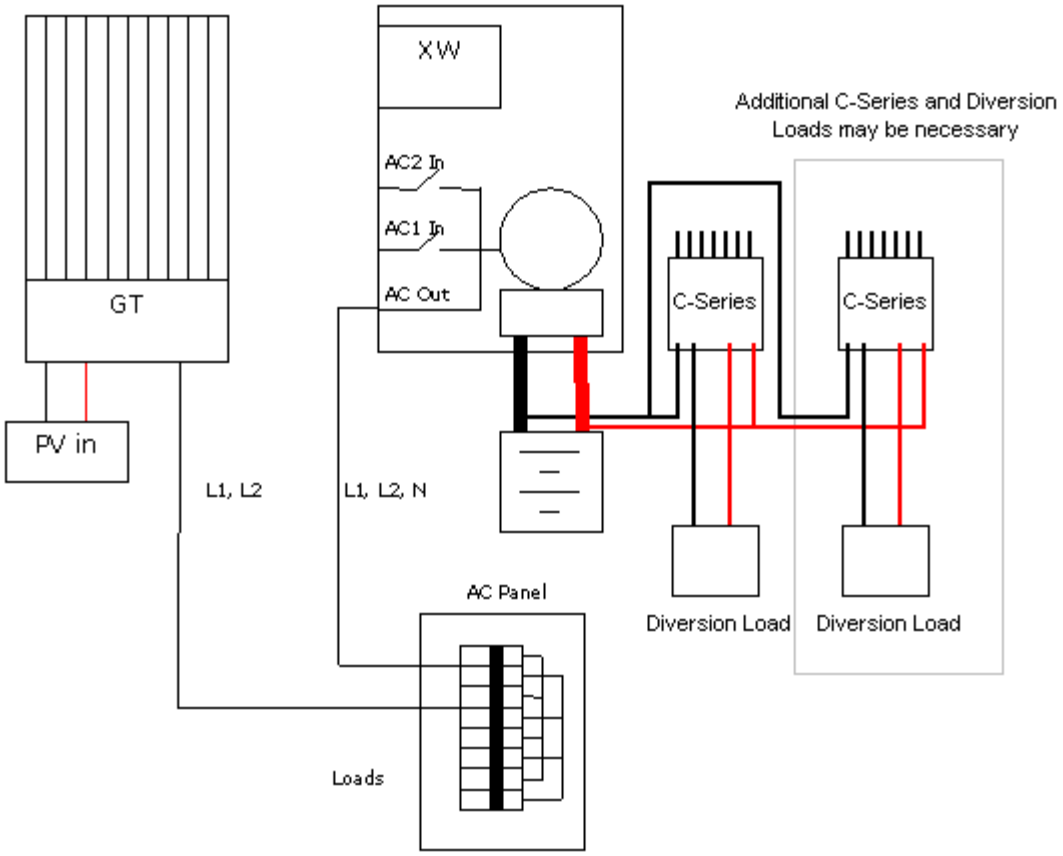

5 Installation Procedure

1. Install the XW Inverter/Charger(s) according to the procedures outlined in the XW Installation Guide.
2. Install the GT Inverter(s) according to its Installation Guide with the following exception: instead of connecting the GT Inverter's AC output into the main service panel, connect these lines into the XW Inverter AC Load Panel (sub panel).
3. If using C-Series and diversion loads, install per user guide, configured in diversion mode. If using the Auxiliary Output of the XW, disregard this step and go to step 4.
4. Connect Overcharge Protection shutdown line to the Auxiliary Output of the XW inverter.

   Option 1- Connect the custom built Optically Isolated interconnect board to the Auxiliary Output of the XW inverter.

   Optocoupler and wiring to connect it must be purchased separately and assembled by the installer. These are common parts and available from electronic component supply sources.

   Option 2- Connect a 12V relay to the Auxiliary Output of the XW inverter.

Relay and wiring to connect it must be purchased separately. These are common parts and are available at any electronics retailer. The relay must have a 12V coil and must not draw more than 0.25A. The contacts experience negligible current flow so the relay can be very small.

Attach wires to the relay's coil terminals and connect to terminals 1 and 4 of the XW's Auxiliary Output.

Connect the Overcharge Protection shutdown line to the GT Inverter's AC 3Phase port.

Connect the RJ11-4pin male terminal into either AC 3Phase Port on the GT Inverter. If using the Optocoupler, proper polarity must be maintained.

5. If more than one GT inverter is in the system, daisy chain the AC 3Phase ports together so all the GT's will shut down from a single XW. (Refer to the GT User Guide for connecting the AC 3Phase ports.)
6. Configure the XW's AUX output to trigger active high (supply 12V) once the battery voltage reaches the bulk/absorption voltage recommended by the battery manufacturer. The trigger "Clear Level" should be set one volt below the battery's float voltage. (Refer to the XW Operation Manual for detailed instructions on setting the Auxiliary output using the XW-System Control Panel.)

6 Limitations

It is not advisable to connect a solar array to the inverter where the PV power output can exceed the XW inverter's power handling capabilities. This has not been tested and the results may be unpredictable.

This system has not been tested with a generator as an AC source to the XW. If one needs to run a generator, it is suggested to turn off the GT inverters to ensure that under no circumstances the GT inverters will backfeed the generator.

The power metering on the XW may not work reliably when the inverter is in voltage source invert mode and power is flowing back into the batteries.