AC-Centric Off Grid Systems

"*Centralized Off-Grid Stations for Rural Electrification*"

TODO SOLAR

¡La Energía del Sol al alcance de TODOS!

Dr. Jeffery Lee Johnson
Coahuila, México

Email: jeff.johnson@todo-solar.com-mx **Tele: (+52)** 871 722 9522 **www.todo-solar.com.mx**

Agenda

- Issues Related to Off-Grid PV Systems for Rural Electrification
- What is an AC-Centric Off-Grid System?
- Creating a Local Grid
- Adding AC Components
- Load Leveling – Overload protection
- A Real Example of an AC-Centric System in Mexico

Large Scale Off-Grid in US is more of a choice than a need

In Many Parts of Developing World Off-Grid is the ONLY Option

Issues for Off-grid Deployment for Rural Electricfication

- The majority of off-grid systems in developing countries are isolated single systems distributed amongst individual sites (homes, schools, community centers, etc)
  - Redundancy of key components such as (inverters, battery chargers and batteries)
  - Energy harvest is location-specific (panels may not be necessarily be optimized)
  - Distributed small systems have issues with optimization, maintainance, saftey and security

How do we get from ..

…This ….

(collection of isolated systems)

…to This ?

(Centralized Stations or Local Grid)

Typical Off-Grid System or *DC-Centric*

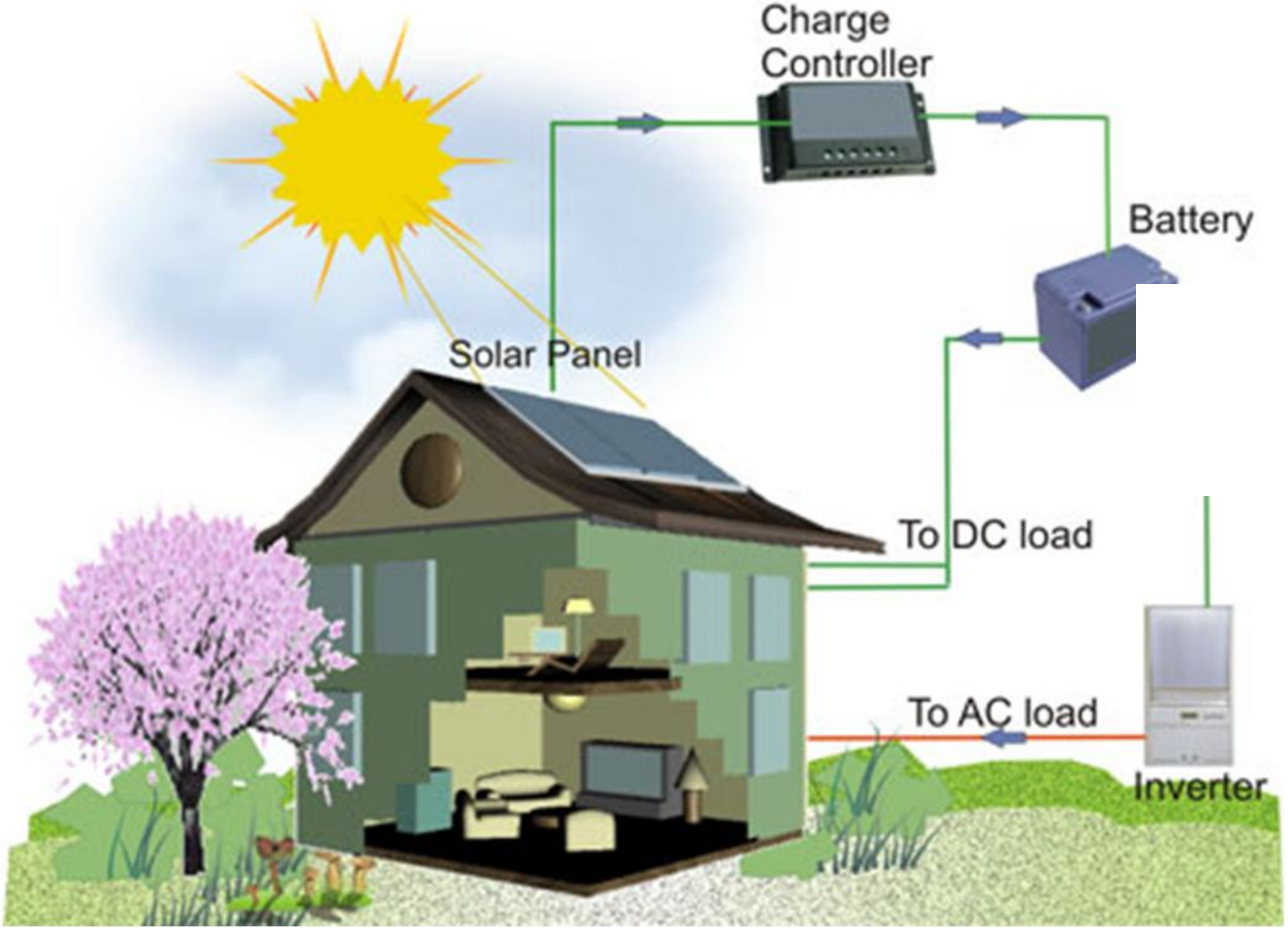

The Key Off Grid Components

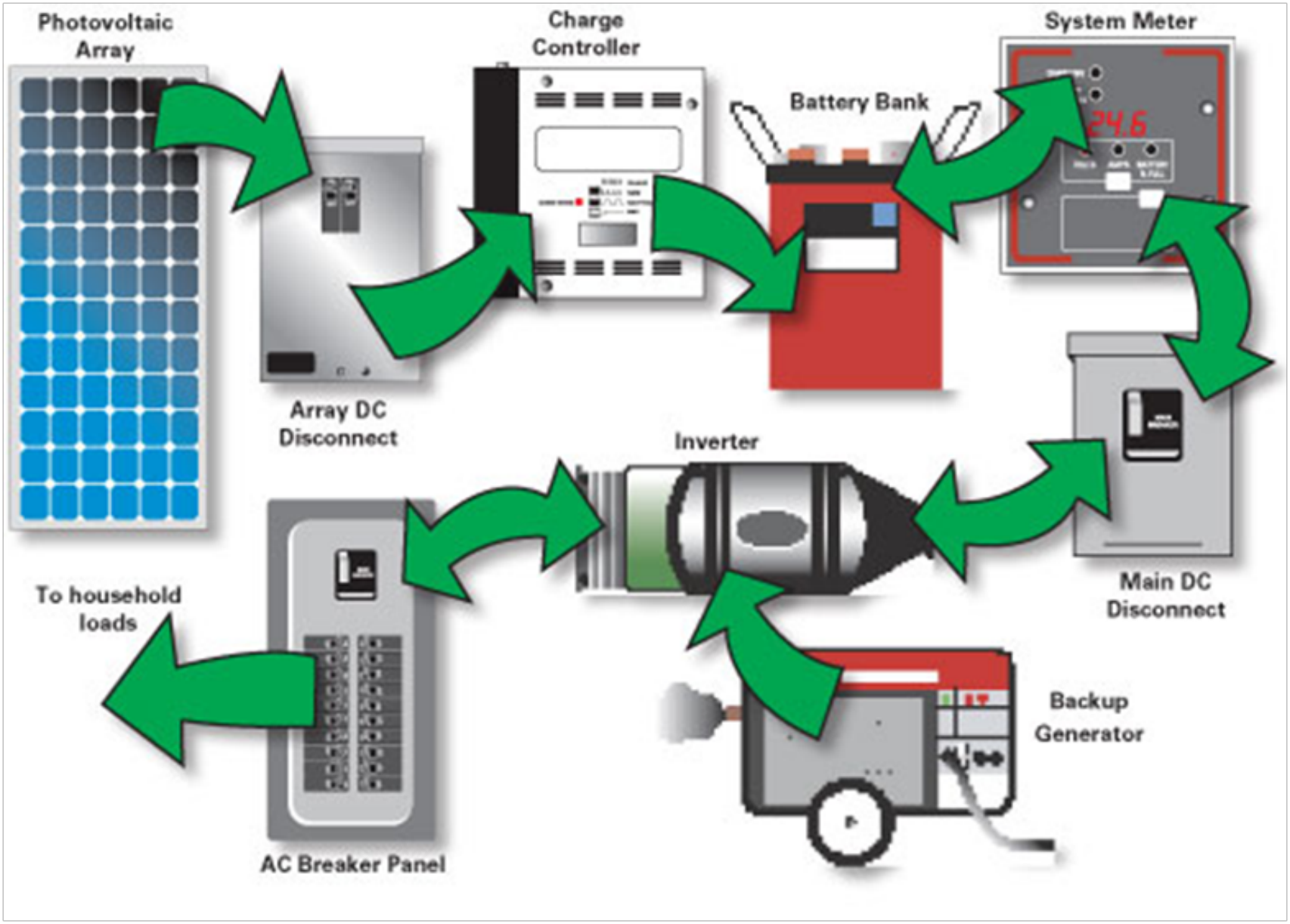

Hybrid System Connected to a Public grid

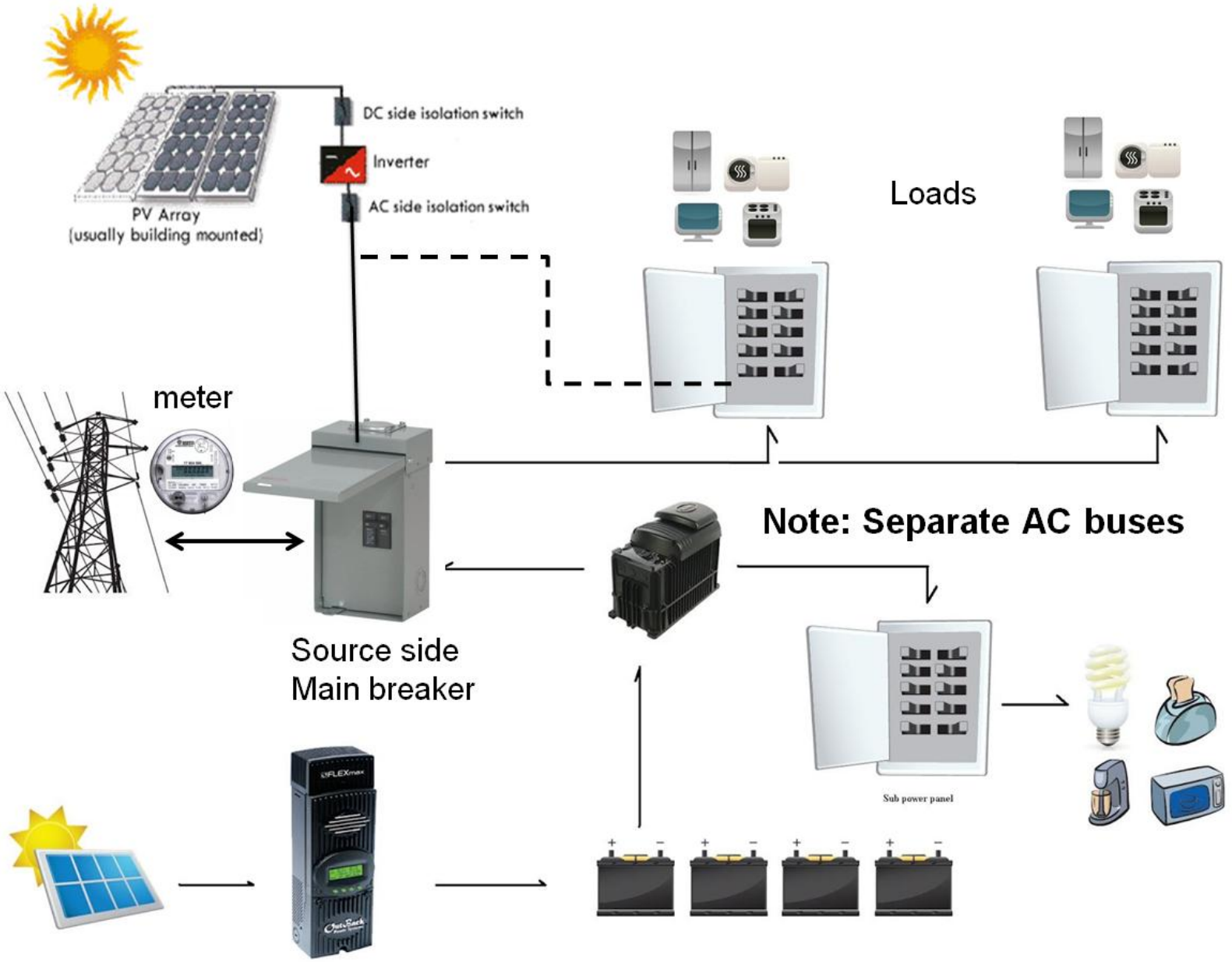

Grid Connected Verses Off-Grid Inverters

Grid Connected Inverters

- Input is independent of Load
- Output is independent of Load
- Input or Energy Harvest is predictable from PV characteristics
- MPPT is available over large Voltage range (180 - 400 VDC)
- Excess Power delivered to public Grid

Off-Grid Inverters

- Both Outpút & Input is dependent on Load
- Input is unpredictable as it depends on Load and Capacity. Need Charge controller to harvest PV directly
- MPPT tracking is available using controller with limited range (0 –150 VDC)
- Power is consumed, stored in batteries or lost

In AC-Centric System, everything is connected to the AC Bus

The philosophy of the residential/light industrial AC centric system is one where all the energy sources and loads are connected directly to the AC bus.

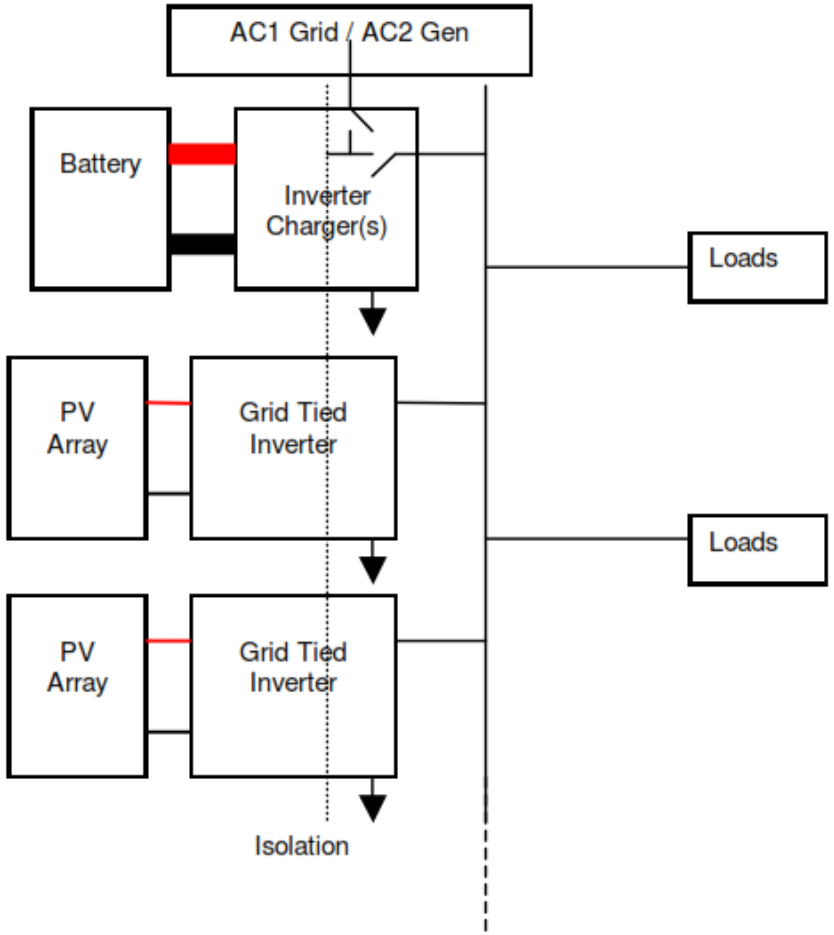

Both Off – Grid & Grid-Connected Equipment is used in conjunction with loads to form a local grid by connecting to the same AC bus

.: Flexible AC centric architecture

At the heart of an AC-Centric Station is an Off-Grid PV system

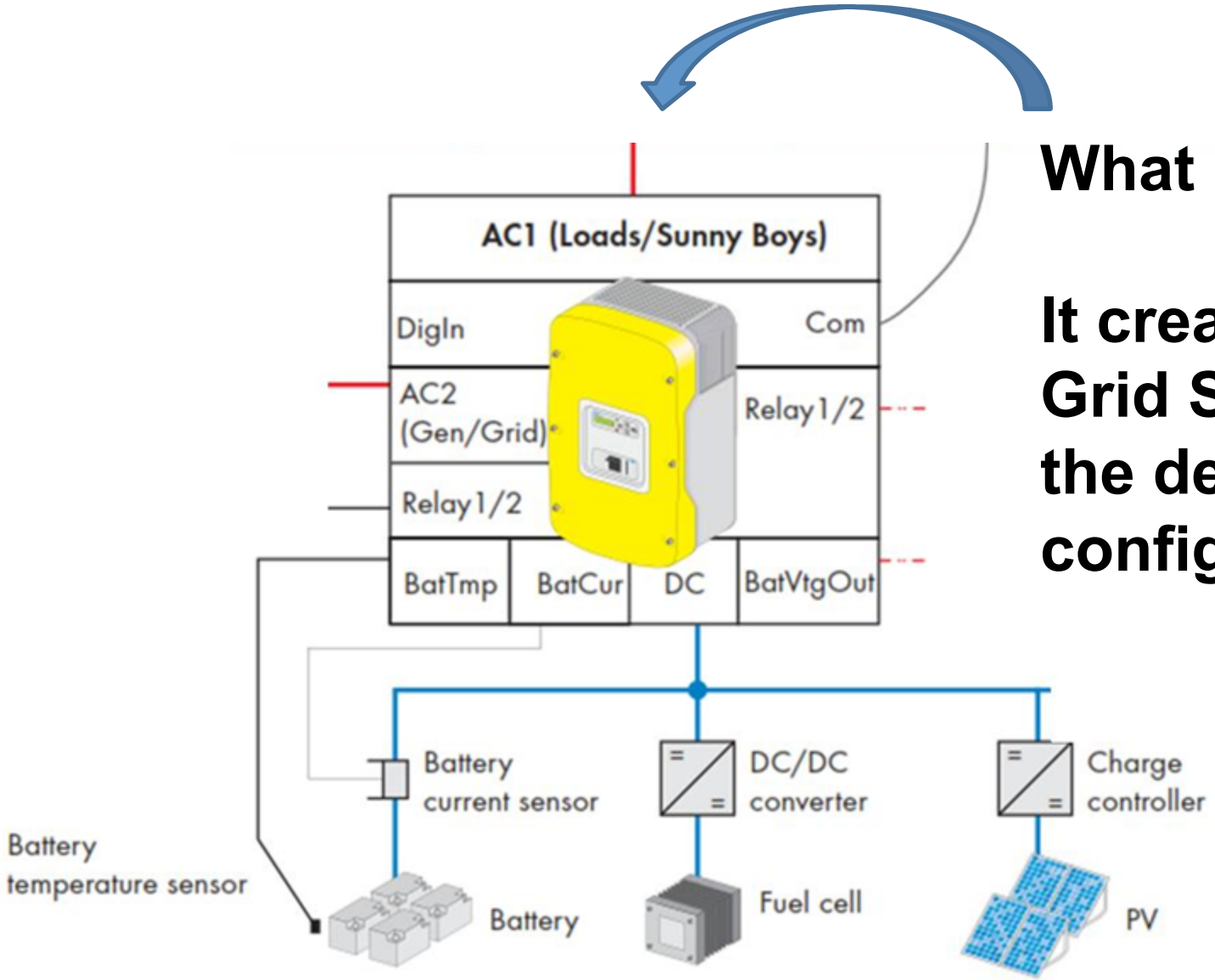

What does it do?

It creates the Grid Signal at the desired AC configuation

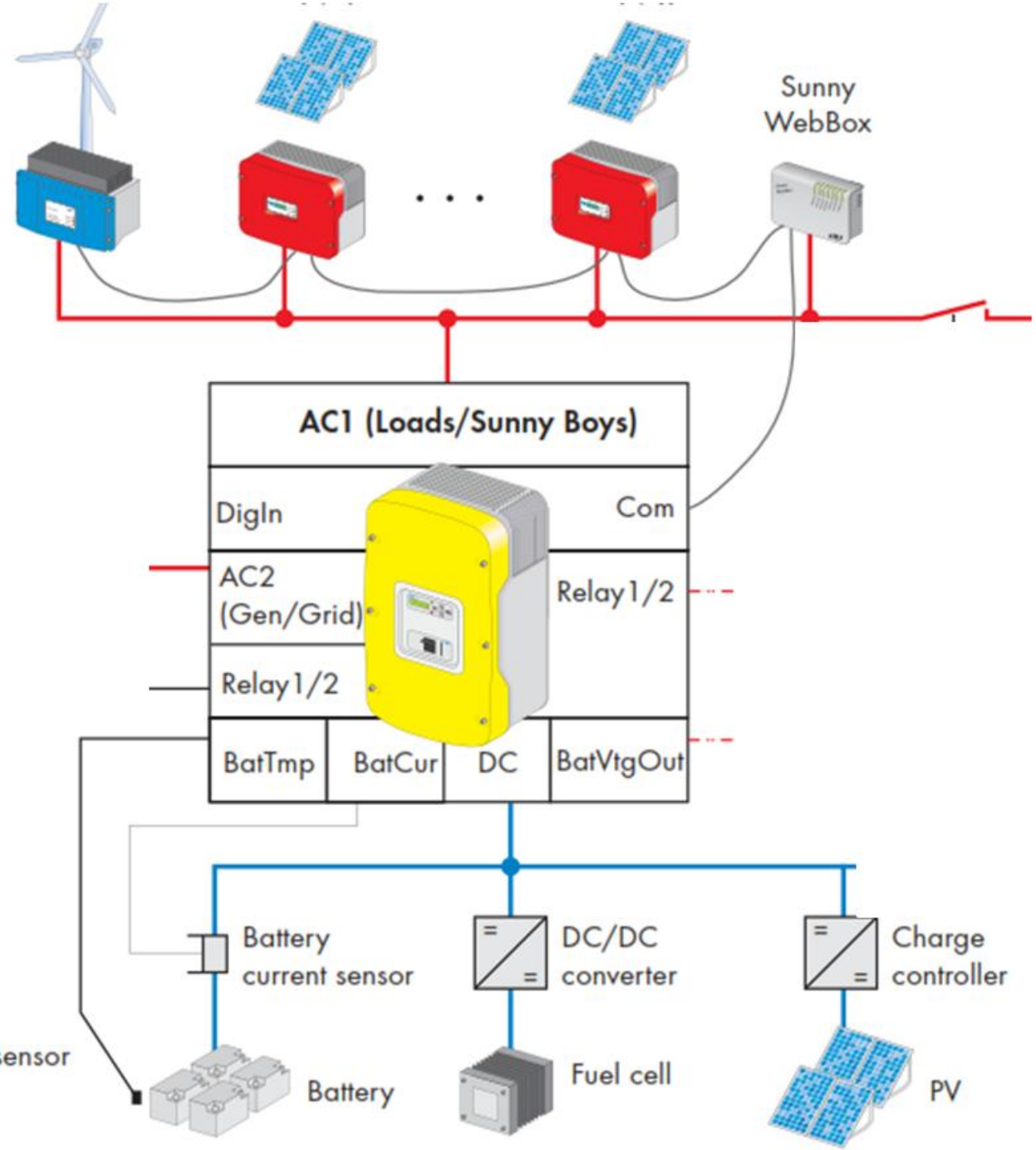

Local Grid

Downstream
distributed Loads

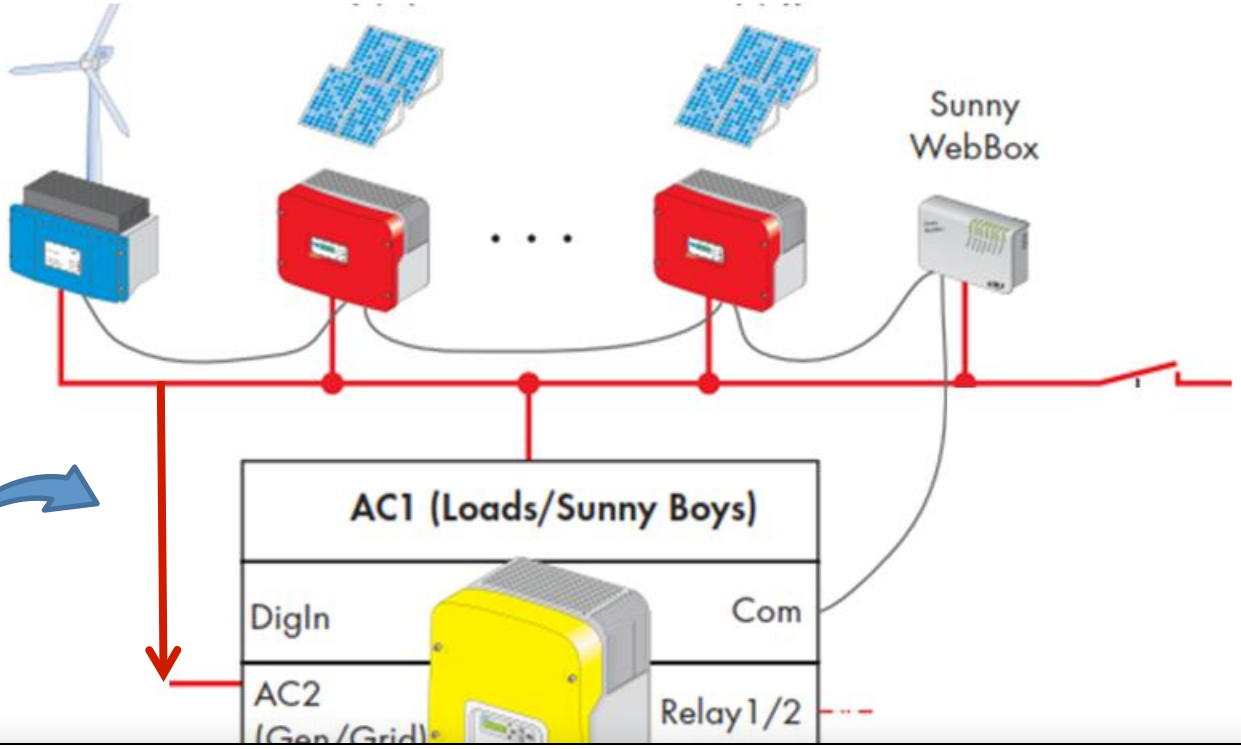

Local Grid

Grid Feeding

Whether energy is fed from the stand-alone grid into the main power grid is controlled using the "250.08 GdMod" parameter. If GridCharge (Default) is set, no energy is fed into the grid. If GridFeed is set, energy is fed into the grid.

Downstream distributed Loads

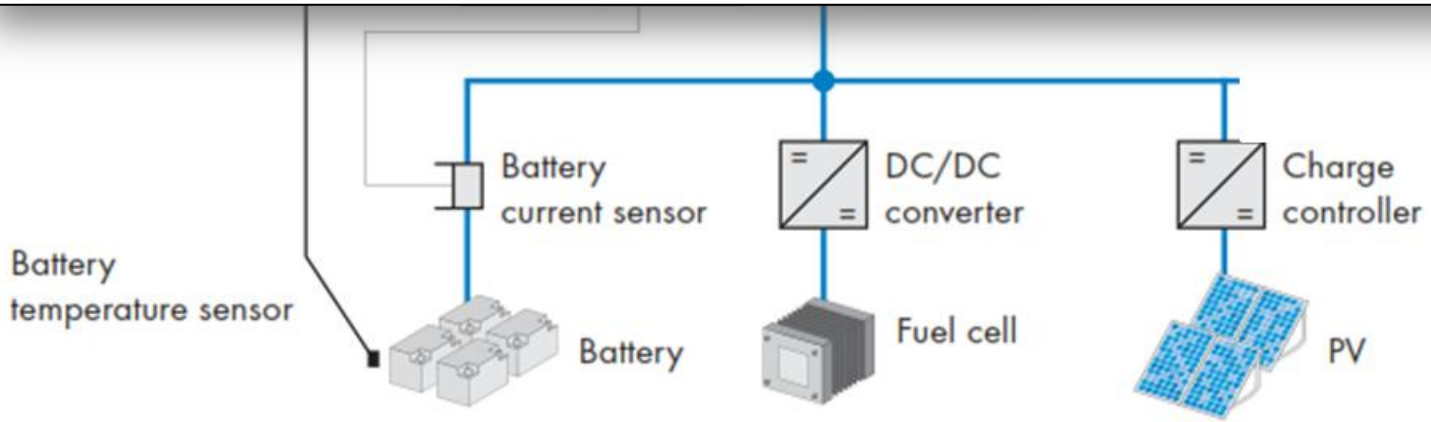

Other Manufactruers offer AC-Centric Capability

Grid Tie

Off-Grid /Hybrid

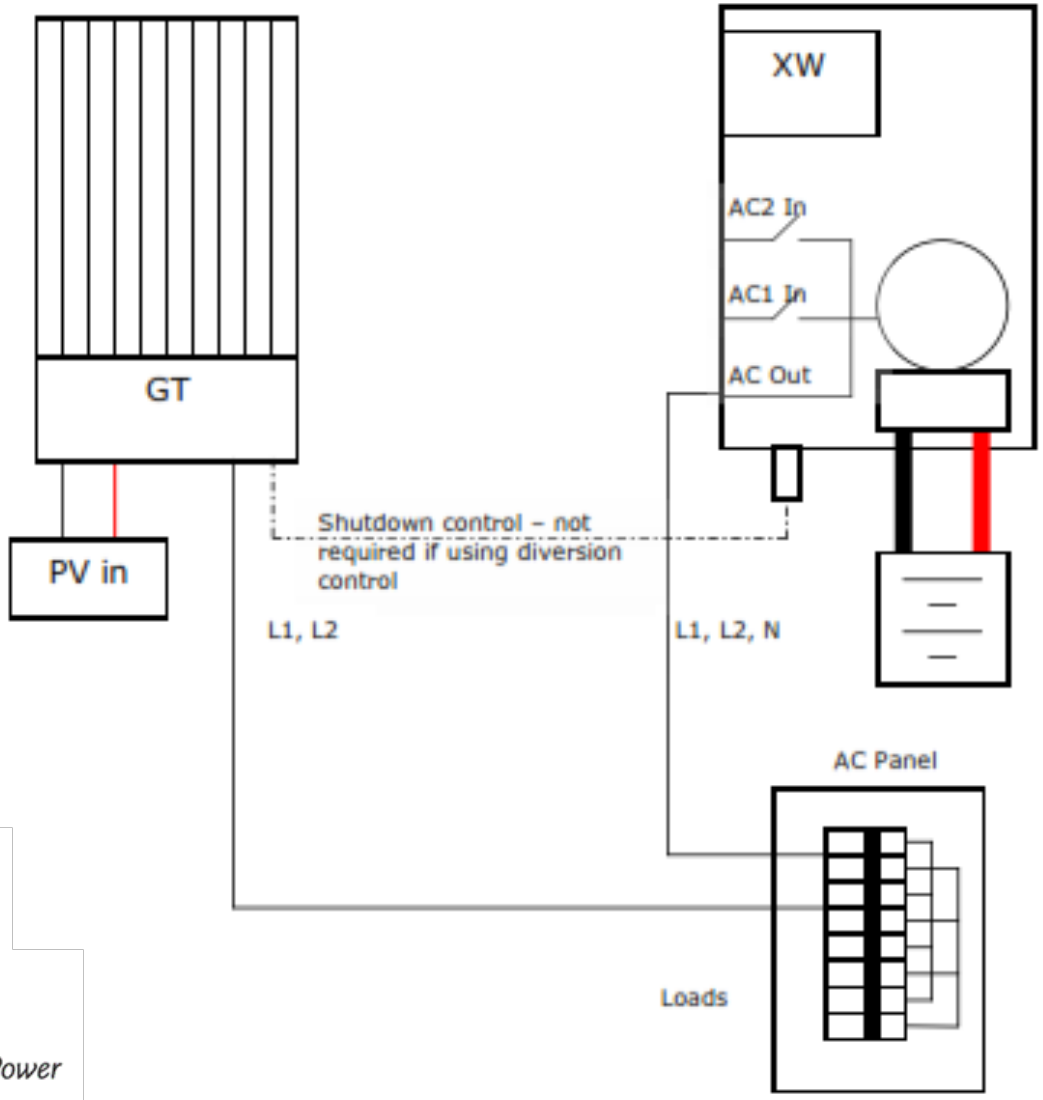

Schneider Electric

xantrex
Smart Choice for Power

Possible to create different type of grids

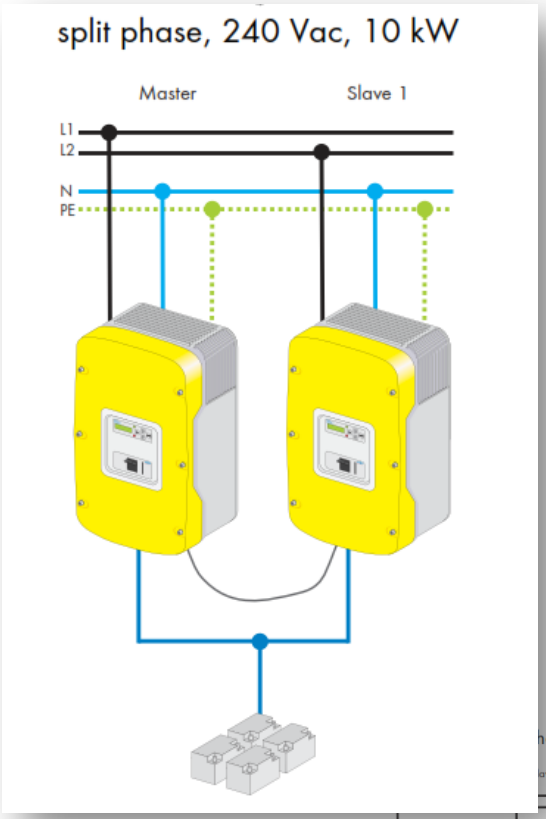

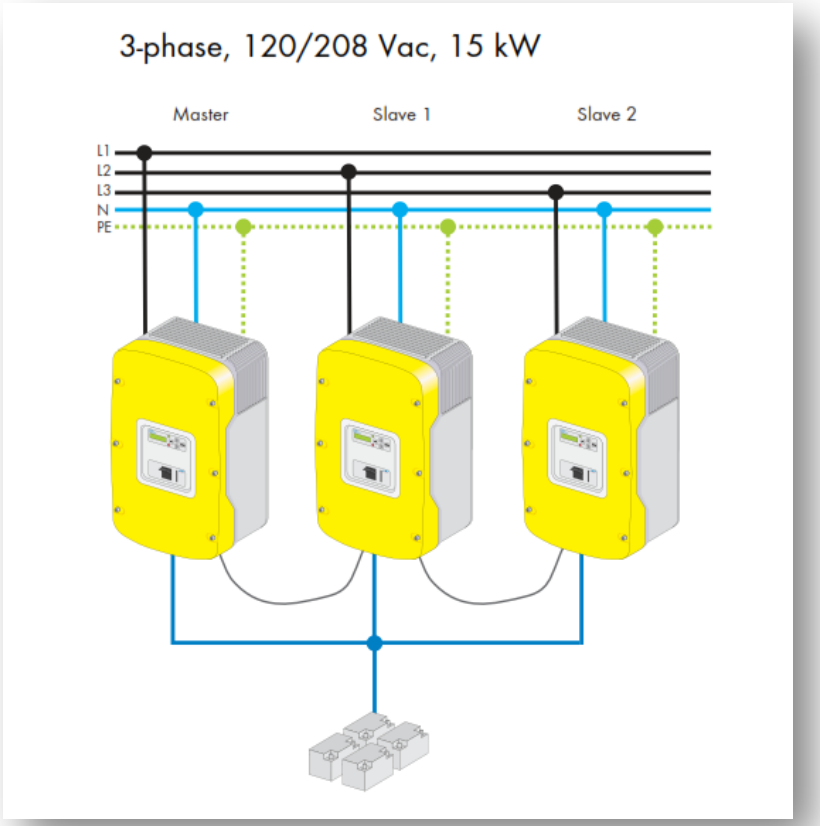

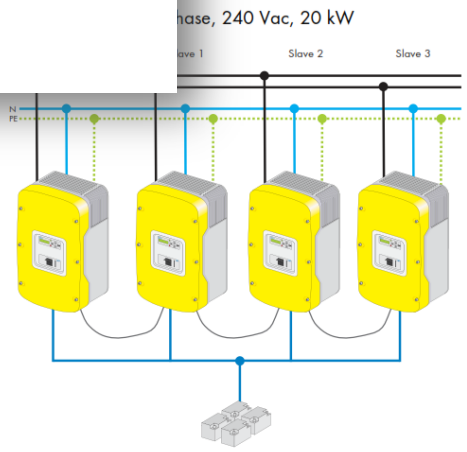

- Note that most Grid-Connected Inverters are two-phase,
-
- Most Off-Grid Inverters are single-phase

Load Leveling is VERY important for AC Centric Systems

Load characteristics of a household with storage solution

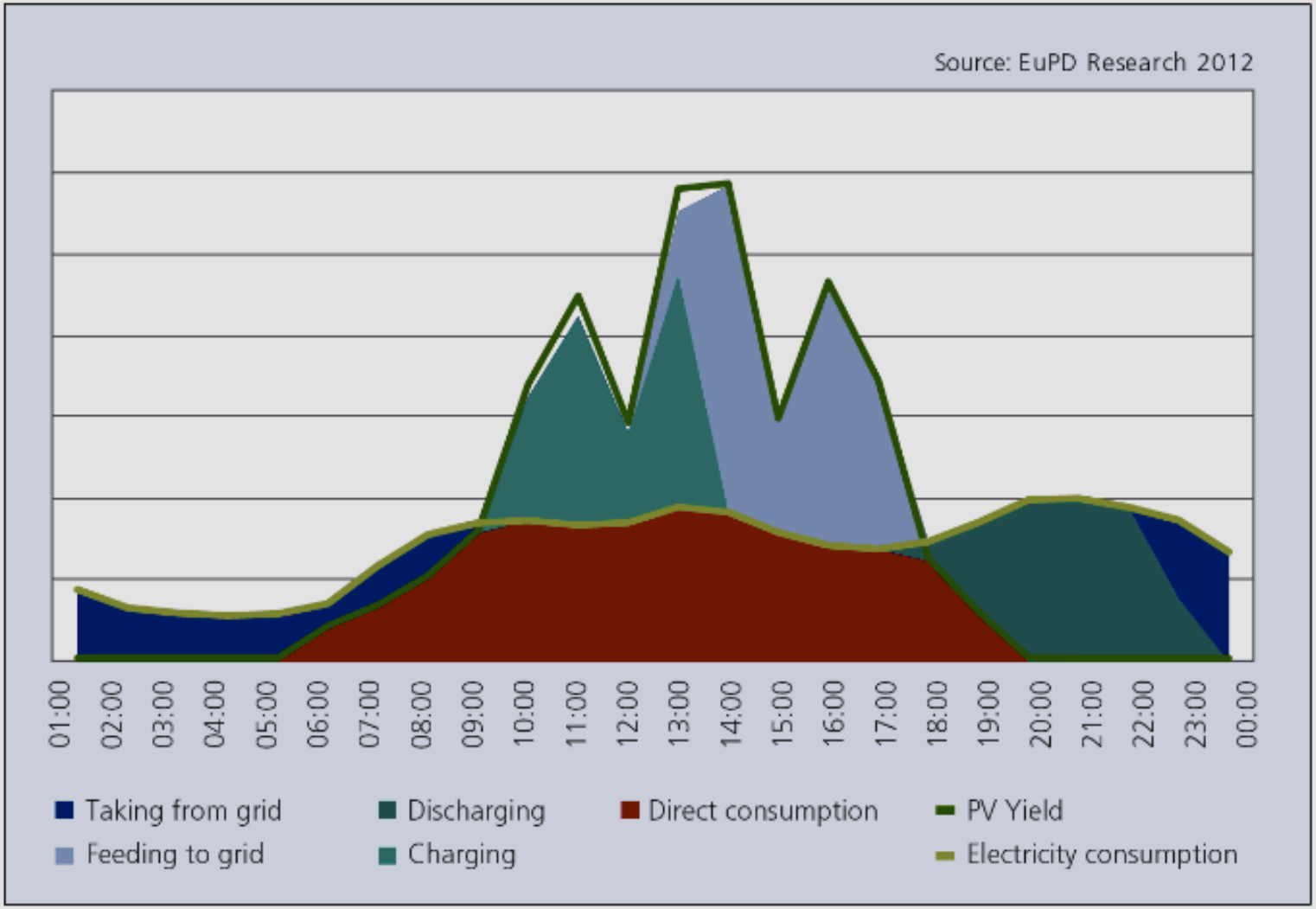

Overload protection (load leveling

- What Happens when Generated Power Exceeds Load?
- Only two options: Shut down GT Inverters or Divert Load

Optically Isolated Shutdown Line

Electromechanical Relay Shutdown Line

Frequency Shift Power Control (FSPC)

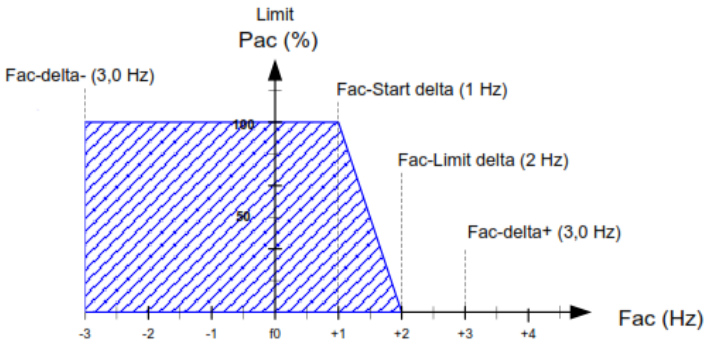

Diversion Control

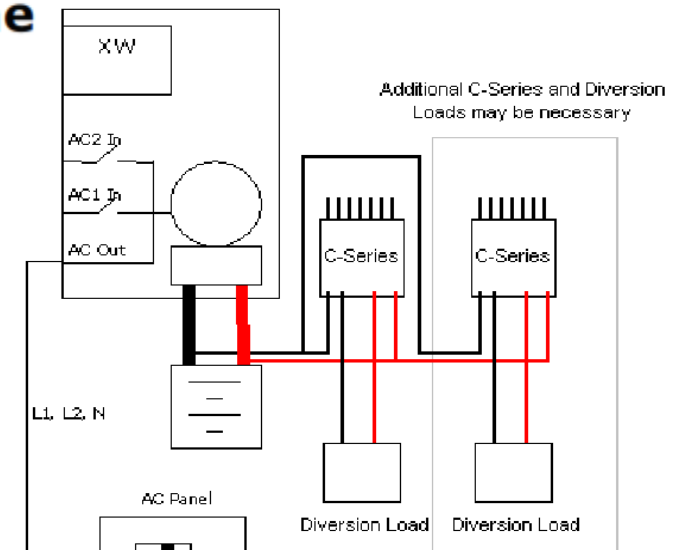

3.2 Stand-alone (Off-grid) Systems

When the grid is not present and it is inverting, the XW Inverter/Charger acts as a voltage source, defining the AC bus by tightly controlling voltage and frequency on its AC output. The GT Inverter(s) and AC loads are all wired to this AC bus. The GT Inverters will qualify and connect to this AC bus just like they would to the utility grid.

When it's in invert mode, electrical current is free to flow in either direction through the XW Inverter/Charger. This means if the GT inverter(s) is providing more power on the AC bus than the loads can consume, current will flow back through the XW to recharge the battery.

Unlike its behavior when in charge mode, the XW does not regulate charging when power is flowing from its AC output to the battery. This will not pose a problem if the battery is sufficiently discharged. However, if the battery is already full and there are not enough loads on the system, there is potential that if the GT Inverter(s) continue selling power to the AC bus, the battery voltage will rise until an over voltage fault condition ("High Batt Cut Out" setting) is reached. This will cause the XW to shut down and will cause the

entire system to shut down, including your AC loads. This may also damage the battery if the "High Batt Cut Out" is set too high for the battery. To prevent this from happening, there must be a method of preventing overcharge.

Alternative Load Leveling Control under development

Make use of Linear portion in power curve at Grid Tied Inverter input to regulate output for load leveling

Closed loop feedback from Off Grid Inverter Status

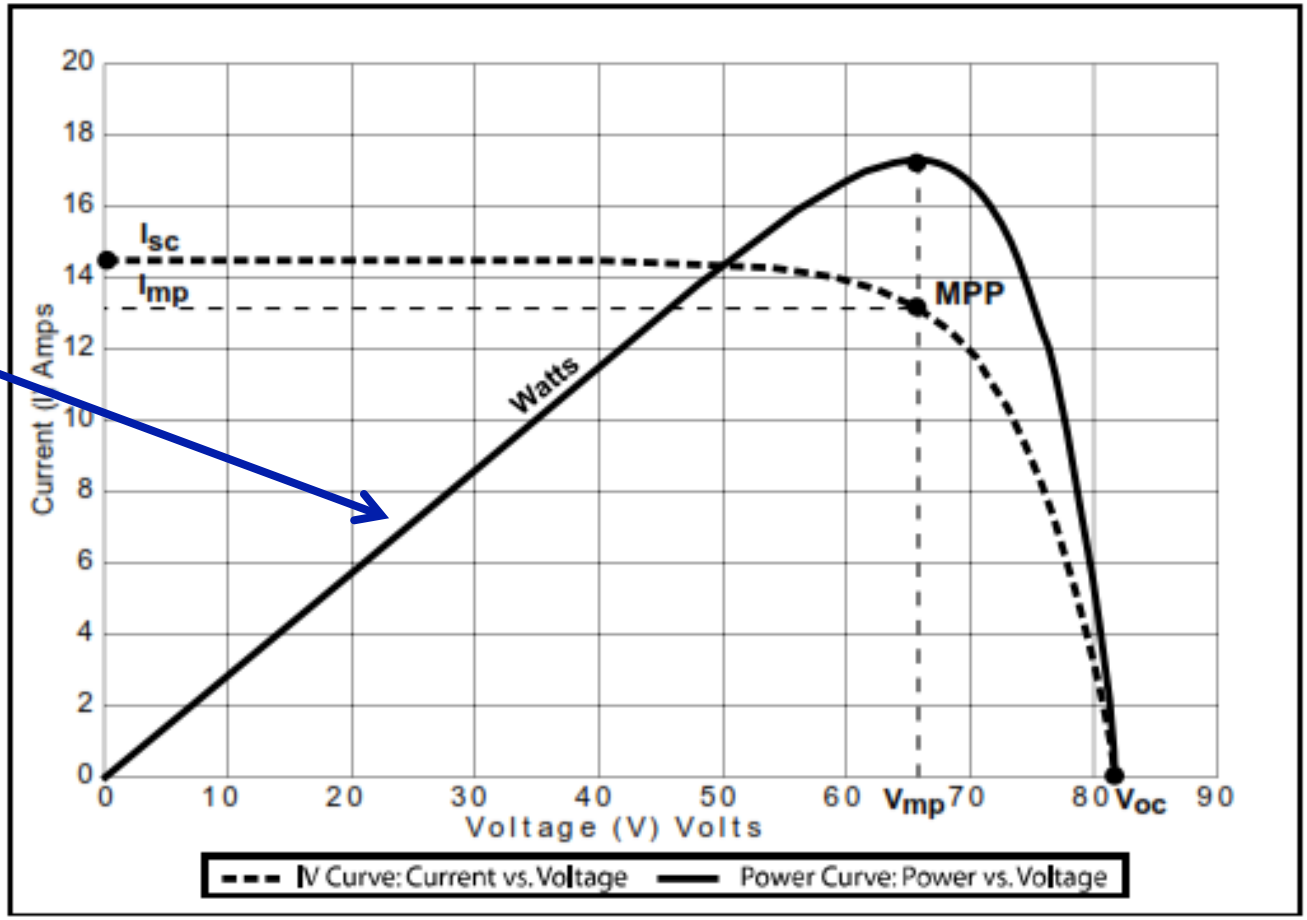

Figure 1-2 Maximum Power Point Curve

Advantages of an AC-Centric Off-Grid System

The benefits of an AC centric system over a DC centric system are as follows:

- DC infrastructure is kept to a minimum by utilizing small gauge wire for high-voltage (<600V) string PV arrays and reducing heavy gauge battery interconnects. This means installation is easier and less expensive since wire sizes and conduits can be smaller.

- Improved array-to-grid efficiency by removing a conversion step. In an AC centric system, the array is connected directly to the grid through a grid-tie inverter, i.e. DC (array) → AC (grid). In a DC centric system, the array is connected to the battery bank through a charge controller, which is then connected to the grid through an inverter/charger, i.e. DC (array) → DC (battery) → AC (grid).

- Improved array-to-load efficiency if demand occurs at the same time as solar production.

The weaknesses of an AC centric system

- Lower array-to-load efficiency if demand does not occur at the same time as solar production since energy needs to be stored in the battery for later use, i.e. DC (array) → AC(bus) → DC(battery) → AC(load).

PECOM
Electricidad y Telecomunicaciones
Proyecto Solar Aislado: Guaycora

TODO SOLAR

¡ La Energía del Sol al alcance de TODOS !

(Solar Energy made available to Everyone)

Twitter: @TodoSolar

http://www.todo-solar.com.mx

TodoSolar KIDS

Twitter: @TodoSolarKids